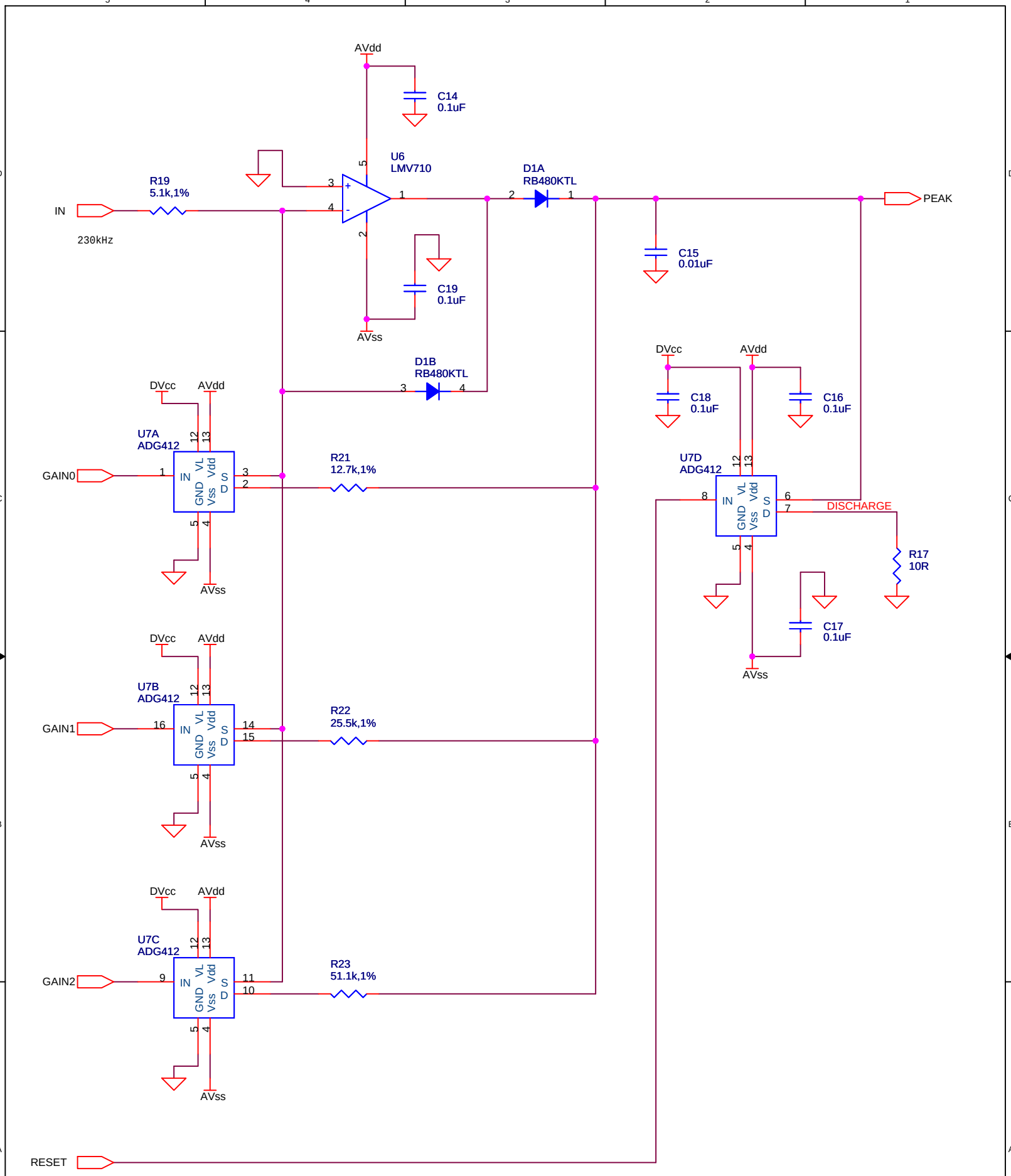

Programmable gain amplifier
PGA
Peak Detector

Title	Programmable Gain Peak Detector	
Size Custom	Document Number <Doc>	Rev 0.1
Date: Sunday, August 24, 2008	Sheet 1 of 1	